Horsepower (HP)	TCI Part Number	Rated Amps (A)	Max Amps (A)	uH +/-5%	Approx Weight (LBS)
300	KDRS2STT	290	361	305	195

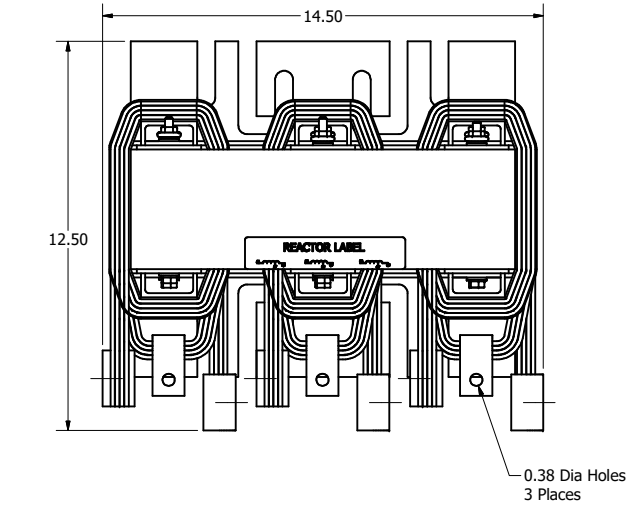

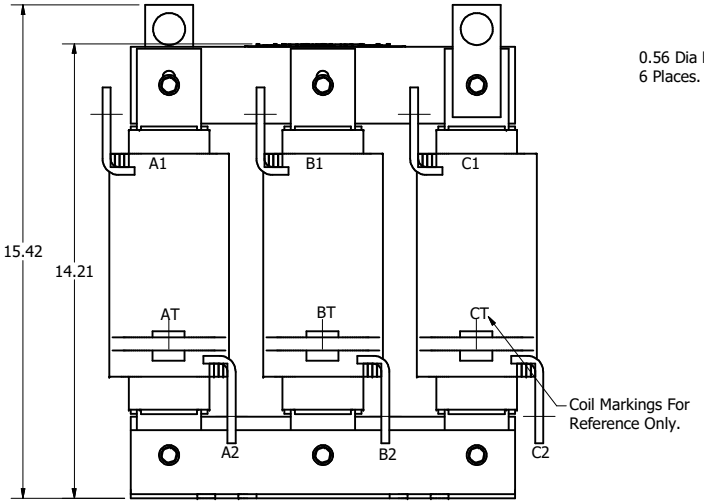

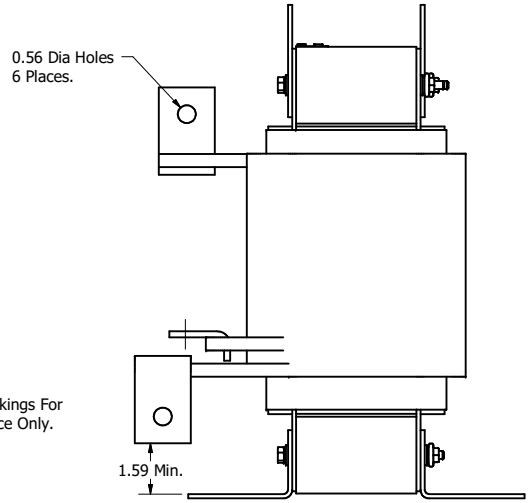

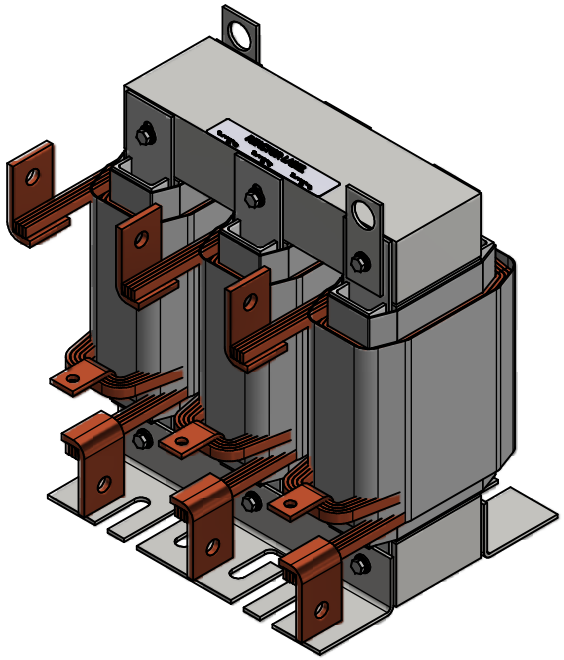

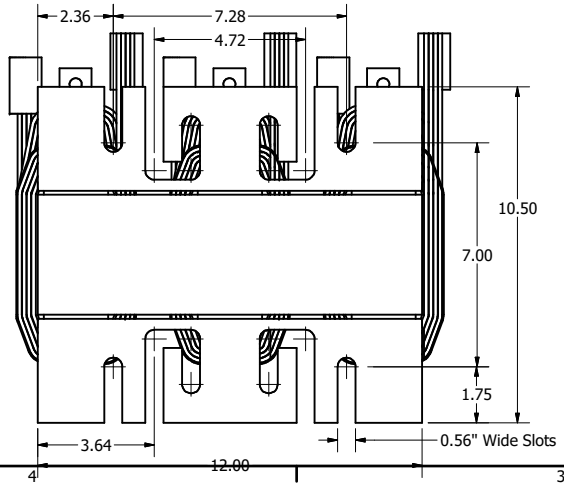

Customer Is Responsible For Installation to
Meet All National And Local Electrical Codes.

Material(s) Shall be RoHS Compliant

TCI, LLC CLAIMS PROPRIETARY RIGHTS IN THE MATERIAL HEREIN DISCLOSED. IT IS SUPPLIED WITHOUT PREDJUDICE TO ANY PATENT RIGHTS OF TCI AND MAY NOT BE REPRODUCED OR USED TO MANUFACTURE ANYTHING SHOWN THEREIN WITHOUT WRITTEN PERMISSION FROM TCI.

NO	REVISION	DATE	BY
D	5149, Was KDRSX1TT	3/12/2020	DSW
C	4707, Update tap	4/25/19	DSW
B	3580, Gap, Wire,Tap, CHG.	12/17/18	DSW
A	As Designed	10/9/18	DSW

TOLERANCES (EXCEPT AS NOTED)
DECIMAL: .XX ± .25, .XXX ± .10
FRACTIONAL: ± 1/16
ANGULAR: ± 1°

TCI
W132 N10611 Grant Drive
Germantown, WI 53022

KDR, HGP Inductor, 480V, 300HP

DRN. BY: DSW | DATE: 10/9/18 | 107908DG
SCALE: | APRVD: | SIZE: C | SHT 1 OF 1